Remote Control Technology
Simple Wireless Solutions

Phone: (866) 701-1146
Fax: (425) 216-7558
www.remotecontroltech.com

Applications Include: Pumps, Valves, Relays, Conveyors, Center Pivots, Lights, Alarm Systems, PLC Activation, Engine Controls, Wireless Automation.

Remote Switch System 2 Installation Guide

Check all wiring connections before applying power!

Operation

The Remote Switch System 2 provides excellent flexibility in programming the transmitter push buttons and receiver relay outputs. Multiple transmitters can be programmed to one receiver. The transmitter push buttons can be programmed sequentially or each push button can be programmed individually to operate a specific relay on the receiver. A Micro-controller in the receiver randomly generates one of over 4 billion security code combinations. This code is then programmed into the transmitter via a link cable, which is also used for programming the transmitter push buttons. A 2 position DIP switch on the receiver serves two functions; it is used to select a relay for individual transmitter push button programming and it is used to select the mode of the receiver relay outputs. The receiver has eight modes that control how the relay outputs function. Each relay is a SPDT Class C rated for 5 amps @ 250VAC with Normally Open (NO), Normally Closed (NC), and a Common (C) contact.

Receiver Installation

The Remote Switch System 2 receiver is the key to setting up the system to run properly. The receiver is used to program the transmitter and to select how the relay outputs function when selected by the transmitter. The Remote Switch System 2 receiver may be shipped in one of two receiver layouts. Although the layout is different the receivers function identically. Key components of the receiver are:

1. Supply Connections
2. Antenna Connections
3. 2 Position DIP Switch
4. Coding Socket
5. Code Change Pins
6. Relay Connections

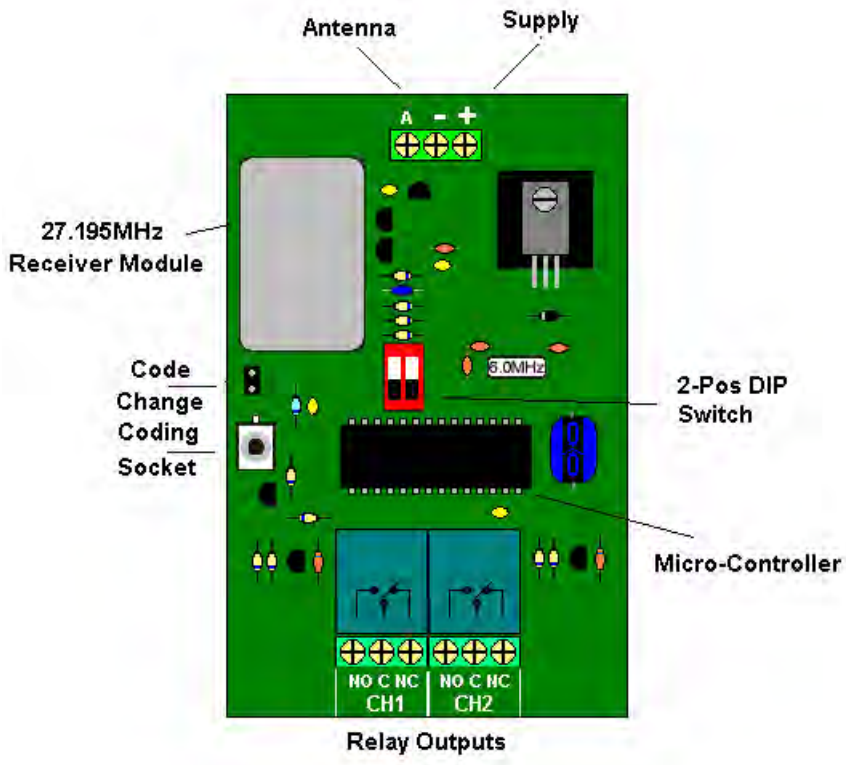

RSS 2 Receiver Installation Instructions:

1. Mount the RSS 2 Receiver inside of an enclosure, on a wall, or on a pole.
2. Connect 12VDC to the terminal block at the top of the receiver. Pos. 12VDC connects to the terminal marked with the"+" symbol. Neg. 12VDC connects to the terminal marked with the"-" symbol.
3. Attach an antenna to the terminal block at the top of the receiver. Connect the center conductor of the antenna to the terminal marked with the "A" symbol and the shield or ground of the antenna to the terminal marked with the "SH" symbol.
4. Connect your device to the desired relay.
5. Repeat step 4 for additional devices.
6. "NO" = a normally open contact, "C" = the common contact, "NC" = a normally closed contact
7. Double check all connections made to the receiver. Pay special attention to the polarity of power connections and the position of the relays to ensure the receiver is set up correctly.
8. Apply 12 VDC to the receiver.
9. Using a flat bladed screwdriver, short the code change pins marked by the "CC" symbol. This will randomly change the receiver security code.
10. Program the transmitter push button operation. (See Transmitter Programming)
11. Using the 2 position DIP switch select the mode of operation for the relays. (See Receiver Relay Operation Modes)

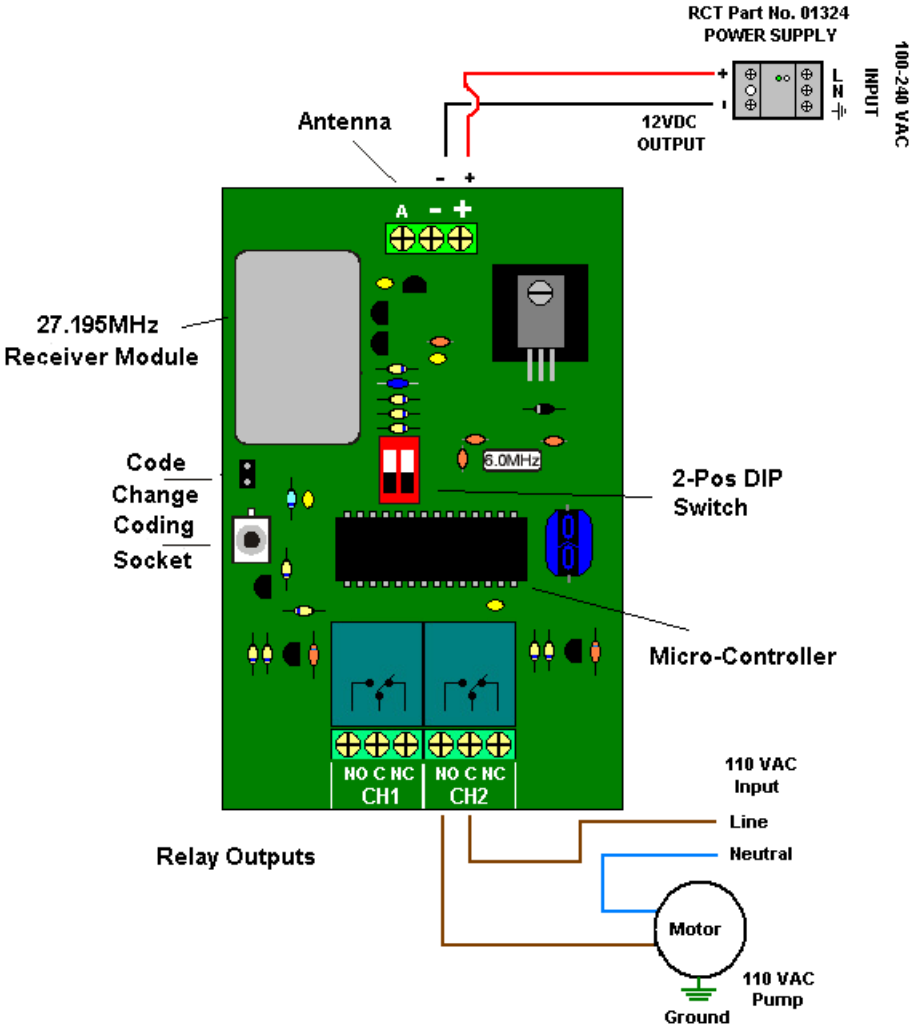

RSS 2 Transmitter Programming:

The RSS 2 transmitter gives the user the flexibility of programming each push button of the transmitter to control a specific relay of the receiver. For example, if the user needs relay 2 of the receiver to latch when push button 1 of the transmitter is pressed, the user can easily program the transmitter to function this way. The transmitter can also be programmed sequentially so that the numbers of the push buttons on the transmitter correspond to the number of the receiver output relays. When push button 1 is pressed on the transmitter relay one of the receiver will latch.

Other features include multi-transmitter programming and multi-receiver programming. These features allow the user program multiple transmitters to control one receiver. Once a transmitter has been programmed, it can be used to program additional receivers. A red LED will blink repeatedly indicating a low battery condition.

Sequential Push Button Programming:

1. Apply 12VDC to the receiver (See Receiver Installation Instructions)
2. Momentarily short the two code change pins marked with the symbol “CC” on the receiver. This will randomly change the current security code of the receiver. (Skip this step if adding additional transmitters to an existing system.)
3. Connect one end of the link cable (RED) to the coding socket of the receiver. (See Receiver Installation Instructions)
4. Remove the battery cover of the transmitter.
5. Connect the opposite end of the link cable to the coding socket just above the battery of the transmitter. Observe the LED on the keypad of the transmitter. It should be solid red. This indicates a properly installed link cable.
6. Simultaneously press two push buttons on the transmitter keypad. Observe the LED on the keypad of the transmitter. The LED will blink twice to indicate the program is complete.
7. Disconnect the link cable form the coding socket on the transmitter, and reinstall the battery cover.
8. Disconnect the link cable from the coding socket on the receiver.
9. Using the 2 position DIP switch on the receiver, select the mode of operation for the relays. (See Receiver Relay Operation Modes)

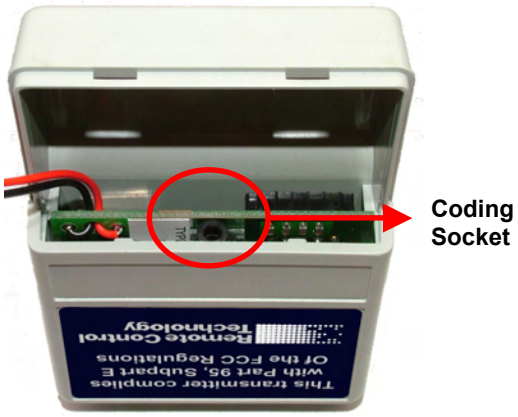

RSS 2 Transmitter
PN: 5209T

Individual Push Button Programming:

1. Follow steps 1 – 5 of sequential push button programming.
2. Select the output relay of the receiver you wish to activate using the 2 position Dip switch on the receiver. Follow the chart to the right.
3. Press the push button on the transmitter keypad that will activate the selected relay. Observe the LED on the keypad of the transmitter. The LED will blink twice to indicate the program is complete.

2 Pos. Dip Switch		Output Relay Number
1	2	
OFF	OFF	1
ON	OFF	2

4. Repeat step 3 for programming additional transmitter push button – receiver relay combinations.
5. Disconnect link cable form the coding socket on the transmitter, and reinstall the battery cover.
6. Disconnect link cable from the coding socket on the receiver.
7. Using the 2 position DIP switch on the receiver, select the mode of operation for the relays. (See Receiver Relay Operation Modes

Multi-transmitter Programming:

1. Follow steps 1, 3 – 8 of sequential push button programming for each additional transmitter.
2. Skip step 2. This will change the security code of the receiver.
3. Using the 2 position DIP switch on the receiver, select the mode of operation for the relays. (See Receiver Relay Operation Modes)

Multi-receiver Programming:

1. Follow step 1 of sequential push button programming.
2. Short the two code change pins marked with the symbol "CC" on the receiver. Maintain the short until Programming is complete.
3. Follow steps 3 – 8 of sequential push button programming. *Note: The battery is required during this step and transmitter LED will NOT illuminate when the link cable is installed. The LED will blink rapidly when the transmitter button is pressed to program the receiver.*
4. Using the 2 position DIP switch on the receiver, select the mode of operation for the relays. (See Receiver Relay Operation Modes)

Relay Operation Modes:

The receiver has three modes that control how the relay outputs function. These modes are user selectable using the 2 Position DIP switch on the receiver. The number on the 2 Position DIP switch corresponds to the relay that switch controls. Position 1 controls relay one & position two controls relay two. The three modes function as follows:

Momentary:

Move the switch position to "OFF" to set the selected relay(s) in momentary mode. In momentary mode, the selected relay(s) will change it's state and maintain it for the duration of the transmission received. Once the transmission is terminated, the relay will change back to its original state.

Flip-Flop:

Move the switch position to "ON" to set the selected relay(s) in Flip-Flop mode. In Flip-Flop mode, the selected relay(s) will change its state and maintain it until a matching transmission is received. Every time a transmission is received the relay will change it's state and maintain it until another transmission is received.

Latching:

If Latching is required a buss wire or 0 Ohm resistor will have to be inserted in the two holes to the right of the 2 Position DIP switch. In latching mode, when the selected relay is activated by the transmitter, that relay will change it's state and maintain it until power to the receiver is removed or interrupted. When in latching mode, the position of the DIP switch has no effect on how the relays function, nor can the mode of the relays be individually selected.

The two relays of the RSS 2 receiver include a terminal block for each relay. Each relay is a SPDT Class C relay rated for 5 amps @ 250VAC with Normally Open (NO), Normally Closed (NC), and a Common (C) contact.

Antenna Directions:

Mount antennas outside of buildings, in a high location, away from V.F.D.'s, large electric motors or any obstructions. Use only high quality coaxial cable and antennas, which RCT can provide. (Do not loop excess coaxial cable into a coil. This will cause a RF (radio frequency) choke and reduce your signal range. If you can, loosely route it back and forth in an "S" configuration).