Remote Control Technology
Simple Wireless Solutions

Phone: (866) 701-1146
Fax: (425) 216-7558
www.remotecontroltech.com

# Medium Range Wireless Switch System Installation Guide

**Check all wiring connections before applying power!**

## *Operation*

### System Description:

Operation is simple; connect a switch, relay, or any device with a dry contact closure to the transmitter inputs (terminal block). When a contact is closed, the transmitter will immediately send an “ON” transmission to the receiver, changing the state of the selected receiver output from 0 VDC to 12 VDC @ 1 Amp. The receiver output can be used to activate a relay, solenoid, or a light. Immediately after a contact is open, the transmitter will send an “OFF” transmission to the receiver, changing the state of the selected output from 12 VDC to 0 VDC, turning off the connected device.

### Transmitter:

The transmitter is designed to send the status of all inputs to the receiver when any input is activated or deactivated. When input 1 is activated, the transmitter will immediately transmit the status of input 1 as “ON” to the receiver. The receiver then activates output 1. During that transmission the transmitter also reports the status of the remaining inputs as “OFF”. When another input is activated while input 1 is active the transmitter will send the state change of that input immediately as well as the status of the remaining inputs. For example, input 1 activates, the transmitter transmits that input 1 is “ON” and 2 is “OFF”. If while input 1 is activated, input 2 activates, the transmitter will immediately transmit that input 1 and 2 are “ON” and that the remaining inputs are “OFF”. If input 2 now deactivates, while input 1 is still activated, the transmitter will immediately transmit the status of all the inputs indicating that input 2 is now “OFF” and input 1 is still “ON”.

When an input is activated or deactivated the transmitter immediately transmits the status of all the inputs. The transmitter will repeat the input status transmission every 18 minutes as long as any input is activated. The transmitter programming starts an 18-minute timer when any input is activated. When additional inputs are activated the transmitter will immediately transmit the status change of the inputs and reset the 18-minute timer. At least one input has to be active for the transmitter to repeat the input status transmission.

### Receiver:

Upon successful reception of the transmission from the transmitter, the selected output(s) will activate. Each output is designed to provide 12 VDC and 1 amp of current. **Any devices connected to an output must not have a current draw of more the 1amp @ 12VDC.** This is suitable to activate the coil of a general purpose (ice cube type) relay. The general purpose relay can be used to activate a device such as a contactor with a 110 VAC coil or a device requiring more then 1 Amp@12VDC. ***Note: Relays are sold separately.***

Once an output is activated, it will remain active for 20 minutes. The output is maintained by the 18-minute repeat transmission of the transmitter. With every transmission from the transmitter the 20-minute off delay is reset. Immediately upon receiving an “OFF” transmission from the transmitter the selected output(s) are deactivated. The 20-minute “OFF” delay prevents the receiver output from remaining active should the “OFF” transmission fail to be received.

## *Operation Continued*

Integrated in the receiver is a noise / signal strength analyzer. This is a useful tool to analyze the local RF conditions. The noise / signal strength analyzer will display the level of ambient noise and the strength of the incoming transmission from the transmitter. The display consists of 4 green LED's (Light Emitting Diodes) 4 amber LED's and 2 red LED's. The green LED's indicate a low to medium level of ambient noise, the amber LED's indicate a medium to high level of ambient noise, and the red LED's indicate a high level of ambient noise. Maximum signal reception can be obtained by reducing the level of noise. The fewer LED's illuminated the better reception. Eliminating or shielding the sources of ambient noise and/or relocating the antenna can help reduce the noise level. See Antenna Installation for more details. When receiving a transmission from the transmitter, the noise / signal strength analyzer will display the signal strength of the transmitter. Like noise, the level of signal strength illuminates the LED's from green to red. The green LED's indicate a low to medium level of signal strength, the amber LED's indicate a medium to high level of signal strength, and the red LED's indicate a high level of signal strength. Keep in mind that the transmitter only transmits in 18-minute intervals, so every 18 minutes, as long as a transmitter input is activated, the receiver will display the strength of the incoming transmission.

## *Receiver Installation*

The receiver is designed to be mounted to a wall or in a larger enclosure. As with any RF receiver, care must be taken in choosing the installation location. Installing the receiver in a location with variable frequency drives, large power transformers, other radio equipment, or any unshielded electrical device may cause interference with the operation of the receiver. A good location would be 20-40 feet from any device that would cause interference. While it may be optimal to locate the receiver 20-40 feet from any device that would cause interference, this is not always possible. For those situations, further steps must be taken to shield the receiver from external interference. Here are a few suggestions to provide some additional shielding:

- Wire AC and DC wiring in separate bundles.
- Use a multi-conductor shielded cable to connect any devices.
- Provide a good earth ground to the receiver power supply.
- Locate the receiver antenna away from any device that would cause interference.
- Install the receiver in a metal enclosure and ground the enclosure to a good earth ground.

When power is applied to the receiver, a red power light will illuminate indicating that the receiver is powered. Upon the reception of a transmission from the transmitter, the selected output will become active and a green light at the selected output will illuminate. At the same time the "POWER" light will blink indicating the receiver has received a successful transmission. This will occur even if the selected output is disabled on the receiver.

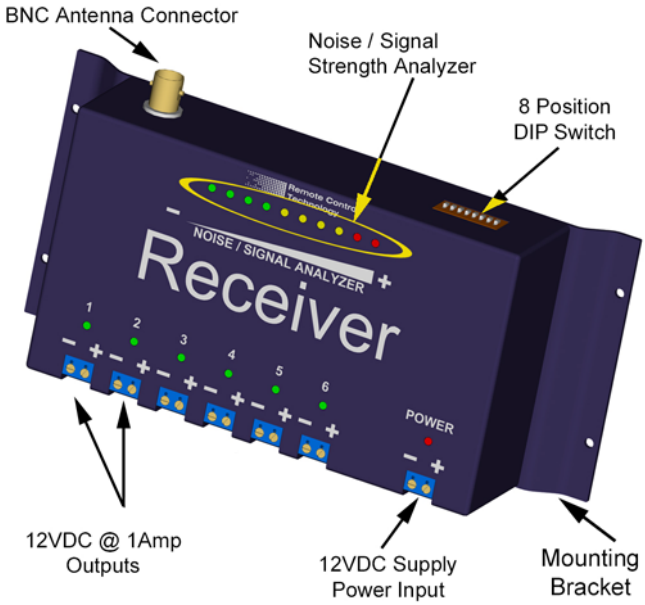


### Receiver Instructions;

1. Connect all devices to the receiver output(s). To energize device "1" connect the positive and negative inputs to the terminal block labeled "1" on the receiver. Connect the positive input to terminal block labeled "+" and the negative input terminal block labeled"-" of the desired receiver output
2. Repeat step 1 for output 2.
3. Connect 110-240 VAC power to the IDEC 12VDC power supply. ***Note: When not using a power supply or on solar panel equipped systems, connect a 12 VDC battery or a 12 VDC source.***
4. Attach antenna or coax cable to the BNC connector on the bottom of receiver enclosure. (Do not loop excess coaxial cable into a coil. This will cause a RF (radio frequency) choke and reduce your signal range. If you can, loosely route it back and forth in an "S" configuration).

## Receiver Installation

### Sample Wiring Diagrams:

The Medium Range Wireless Switch System can be wired to control multiple devices (one device per output) or the outputs can be wired to control a single device.

Example 1: This receiver is wired so that, each output controls a separate device (relay). Up to two devices can be controlled individually.

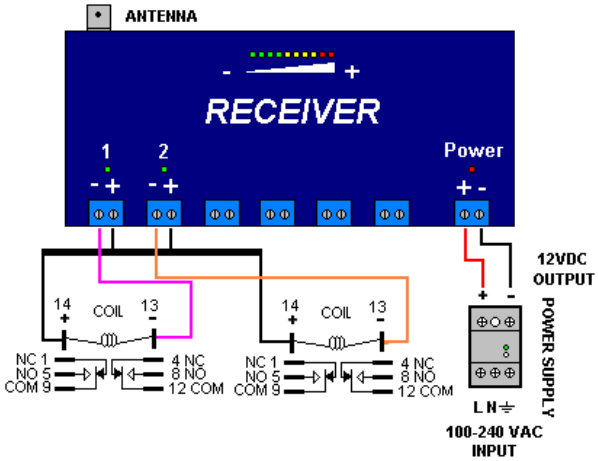


**Multiple Device Control Wiring Diagram Example**

Example 2: The outputs of this receiver are wired so that the contacts of the relays connected to the receiver are wired in parallel to the pump start relay. When one or all of the receiver outputs are active, the pump is enabled. This system is wired so that the receiver outputs control a single device (in this example, the pump is the single device).

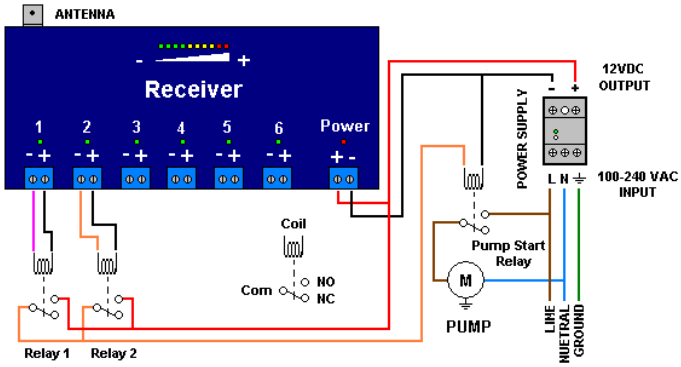


**Single Device Control Wiring Diagram Example**

***Relays are displayed as an example and are not included. Relays can be purchased separately*.**

### Transmitter Instructions:

## Transmitter Installation

The transmitter reqires a dry contact to activate an input. The dry contact can be a switch or the contacts of a relay. As with any RF transmitter, care must be taken in choosing the installation location. Installing the transmitter in a location with variable frequency drives, large power transformers, other radio equipment, or any unshielded electrical device may cause interference with the operation of the transmitter. A good location would be 20-40 feet from any device that would cause interference. While it may be optimal to locate the transmitter 20-40 feet from any device that would cause interference, this is not always possible. For those situations, further steps must be taken to shield the receiver from external interference. Here are a few suggestions to provide some additional shielding:

- Wire AC and DC wiring in separate bundles.
- Use a multi-conductor shielded cable to connect devices to the inputs.
- Provide a good earth ground to transmitter power supply.
- Locate the transmitter antenna away from any device that would cause interference.

***NOTE: Prior to installation, bench test each system to confirm its configuration and to become familiar the system operation.***

When the dry contact connected to a transmitter input is closed the transmitter will initiate a transmission, when this happens the power meter lights at the top of the transmitter will flash from green to red, the input status light of the selected input will illuminate, and the power light will blink. As long as the input contact is closed the input status light will remain on and the power light will blink.

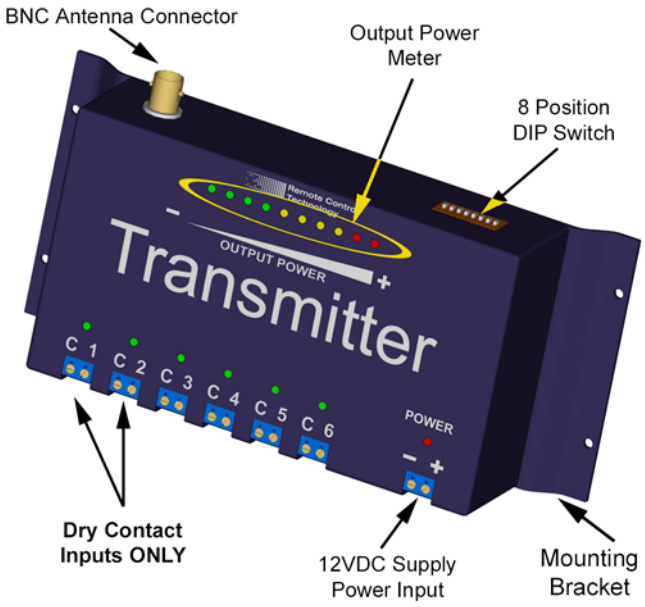

## *Transmitter Installation*

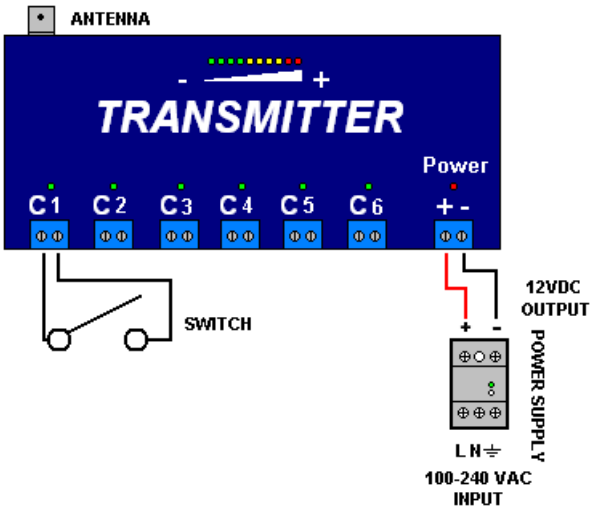


1. Connect one wire of a two wire dry contact closure for station “1” to the terminal block labeled “1”. Connect the other wire to the terminal block to the left of the terminal labeled “C”.
2. Connect one wire of a two wire dry contact closure for station “2” to the terminal block labeled “2”. Connect the other wire to the terminal block to the left of the terminal labeled “C”.
3. Connect your 110-220 VAC power to the IDEC 12VDC power supply. ***Note: When not using a power supply or on solar panel equipped systems, connect a 12 VDC battery or 12 VDC source.***
4. Install antenna or coaxial cable with BNC connector to the BNC connector on the bottom of transmitter enclosure. (Do not loop excess coaxial cable into a coil. This will cause a RF (radio frequency) choke and reduce your signal range. If you can, loosely route it back and forth in an "S" configuration).

### Dip Switch Configuration:

The DIP switches for the transmitter and the receiver should come pre-configured from RCT. There may be an occasion where the DIP switch settings need to be changed in the field or additional transmitters are added to an existing system. For those situations, here is a simplified method of configuring the DIP switches. Each transmitter and receiver has one eight-position DIP switch. The DIP switch for the transmitter must match the DIP switch for the receivers. These switches can be on or off in any combination as long as the switches are configured the same on all the transmitters and the receiver in the system.

## *Antenna Installation*

### Antenna Installation:

Successful wireless communication range is achievable in most locations as long as these installation practices are observed. Remote Control Technology can supply connectors and RG58 Coaxial Cable in lengths of 3, 10, 25, 50, and 100 feet (specify when ordering).

**The antenna for the transmitter and the receiver require a good ground plane for maximum performance.** This can be achieved by supplying the antenna bracket with a good earth ground. Connecting a 10 AWG or larger wire from the lightning arrestor to an earth ground would be sufficient. Mounting the antenna bracket to a metal pole or conduit that is connected to an earth ground will also provide a good ground plane. Following these guidelines will maximize range:

- Mount the antennas at least 40 feet away from electric motors, large power transformers, power lines, VFDs or any equipment that produces ambient electrical noise. Otherwise, the receiver may have trouble distinguishing the FM transmitter signal from this noise.
- Mount all antennas outdoors. The Medium Range Wireless Switch System (both FM transmitter and receiver) communicates in the RF radio frequency spectrum at 27 MHz. This frequency has great characteristics for long range but the signals will not go some through walls. For equipment located indoors, run a length of RG-58 coaxial cable from the receiver to an antenna mounted outdoors.
- Mount antennas as high as possible, at least 3 feet away from vertical surfaces and not under roof awnings. If mounting the antenna on a building, mount it at the apex or the highest point of the building.
- When mounting the antenna to a metal pole, mount the antenna at the top of the pole or at least 3 feet away from the pole.
- Avoid mounting the antenna on the same pole as the power service.
- Avoid mounting the antenna on or near a chain link fence. If necessary, the antenna can be mounted at least 3 feet above the fence
- Use only high-quality antenna and cable connectors, which are available from Remote Control Technology.
- Check that the antenna mounting bracket is assembled as the diagram below.

## *Antenna Installation*

Included with each system is a 42” Francis antenna and a right angle mounting bracket for the transmitter and receiver. If for any reason the antenna bracket needs to be disassembled reassemble the bracket exactly as shown in the diagram to the right to prevent the antenna from shorting to ground.

Installed on each mounting bracket is a Lightning arrestor. The lighting arrestor is designed to provide some protection against near by lighting strikes. There is no guarantee that a direct lightning strike will prevent damage to the receiver. For best results use at least a 10 AWG copper wire connected to an earth ground and or lightning rod. Connect the wire on the screw with the crimp lug.

Lightning Arrestor

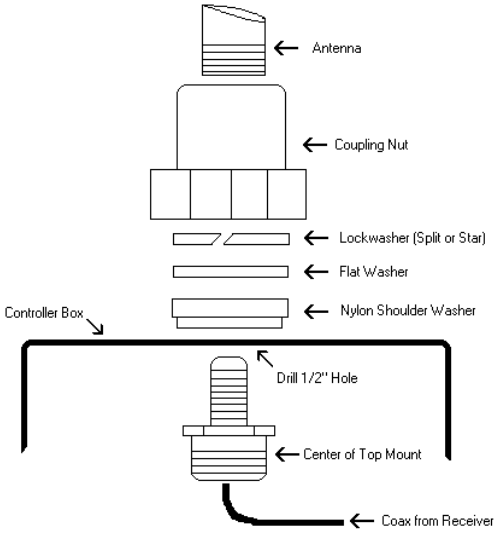


Right Angle Bracket Assemble Diagram

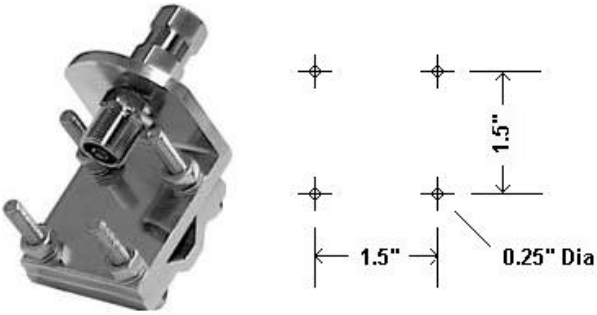


Right Angle Bracket Hole Locations