Remote Control Technology
Simple Wireless Solutions

Phone: (866) 701-1146
Fax: (425) 216-7558
www.remotecontroltech.com

Long and Medium Range Wireless Switch System Installation and Operation Guide

Introduction 1
Before Installation 2
Receiver Installation 3
Transmitter Installation 4
Operation 5
Receiver Output 5
DIP Switch Configuration 5
Reading the Noise/Signal Strength Analyzer 5
Optimizing Your Wireless Switch System 6

Introduction

Thank you for choosing Remote Control Technology's Wireless Switch System. This versatile device has numerous practical applications and will surely become a mainstay in your business and production structure.

This system consists of:

- 1 wireless radio transmitter
- 1 wireless radio receiver
- 2 metal enclosures with built-in power supplies
- 2 42" high-gain antennas
- 2 right angle mounting brackets
- 2 lightning arrestors (attached to the mounting brackets)

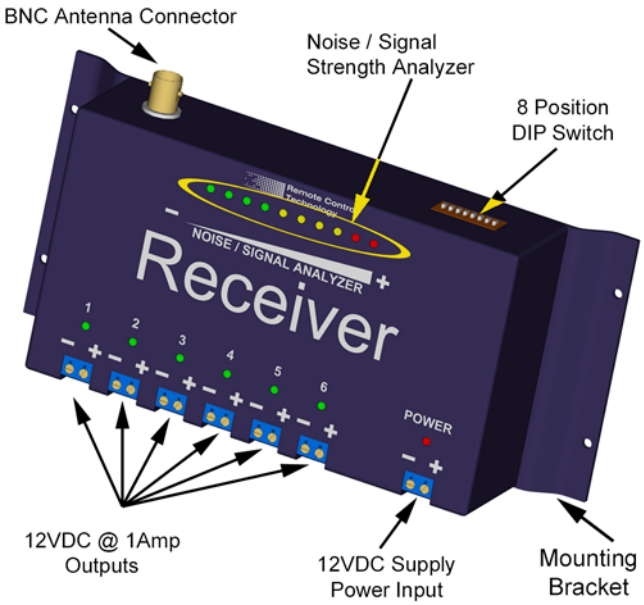

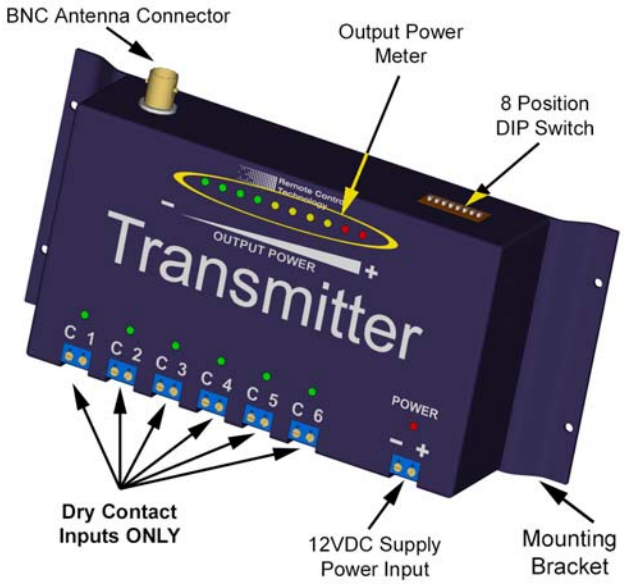

Before Installation

- Remote Control Technology recommends that you have your new wireless switch system installed by a professional electrician.
- Be sure to install the receiver and transmitter at least 20-40 feet away from any other device that would cause interference, such as variable frequency drives, large power transformers, and other radio equipment.
- Keep AC and DC wiring in separate bundles.
- Use a multi-conductor shielded cable to connect any devices.
- Provide a good earth ground to the receiver and transmitter power supplies.
- Locate the receiver and transmitter antennas away from any device that would cause interference.

To Test: Separate the transmitter and receiver by at least 20ft. Do not install the receiver antenna while testing. Never transmit without attaching the transmitter antenna.

Receiver Installation

1. Route the positive and negative inputs of a device, such as a relay, through one of the holes at the bottom of the receiver enclosure and connect them to their corresponding terminals on the desired output. The outputs will be labeled from 1–6 on the Long Range Wireless Switch System (LRWSS) and 1–2 on the Medium Range Wireless Switch System (MRWSS).

   Caution: Do not connect any devices that draw more than 1 A at 12 VDC directly to the receiver outputs. Doing so will result in damage to the receiver.

2. Attach the antenna to the antenna bracket assembly. The lightning arrestor is shipped connected to the antenna bracket. Do not disassemble the antenna bracket or the lightning arrestor.

3. Connect the antenna bracket assembly to the coaxial cable provided and attach the cable to the BNC connector at the bottom of the receiver enclosure.

   Note: Do not loop excess coaxial cable into a coil. This will cause a radio frequency choke and reduce your signal range. Lay excess cable in a straight line or loosely route it back and forth in an "S" configuration.

4. If the system is a LRWSS, mount the receiver to a wall, pole or another enclosure using the mounting holes provided on the enclosure. If the system is an MRWSS, affix the wall mounting brackets included with the system to the back of the receiver enclosure and then mount it to a wall pole or another enclosure.

5. Route the leads of a 110–240 VAC power source through one of the holes at the bottom of the enclosure and connect it to the IDEC 12 VDC power supply. When not using utility power or when using solar panel equipped systems, connect a 12 VDC battery or any other 12 VDC source directly to the power terminal of the receiver.

   Caution: Check all wiring connections before applying power. Failure to do so can result in serious damage to your product.

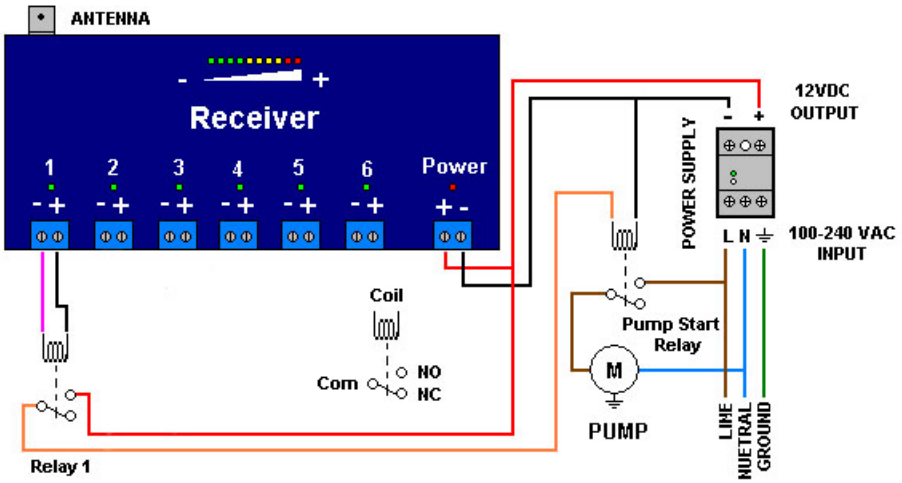

Transmitter Installation

1. Connect the wires of your dry contact closure(s) to the desired terminal block(s) on the transmitter.

2. Attach the antenna to the antenna bracket assembly. The lightning arrestor is shipped connected to the antenna bracket. Do not disassemble the antenna bracket or the lightning arrestor.

3. Connect the assembly to the coaxial cable provided and attach the cable to the BNC connector at the bottom of the receiver enclosure.

   Note: Do not loop excess coaxial cable into a coil. This will cause a radio frequency choke and reduce your signal range. Lay excess cable in a straight line or loosely route it back and forth in an "S" configuration.

4. If the system is a LRWSS, mount the transmitter to a wall, pole, or another enclosure using the mounting holes provided on the enclosure. If the system is an MRWSS, affix the wall mounting brackets included with the system to the back of the transmitter enclosure and then mount it to a wall pole or another enclosure.

5. Route the leads of a 110–240 VAC power source through one of the holes at the bottom of the enclosure and connect it to the 12 VDC power supply. When not using utility power or when using solar panel equipped systems, connect a 12 VDC battery or any other 12 VDC source directly to the power terminal of the receiver.

   Caution: Check all wiring connections before applying power. Failure to do so can result in serious damage to your product.

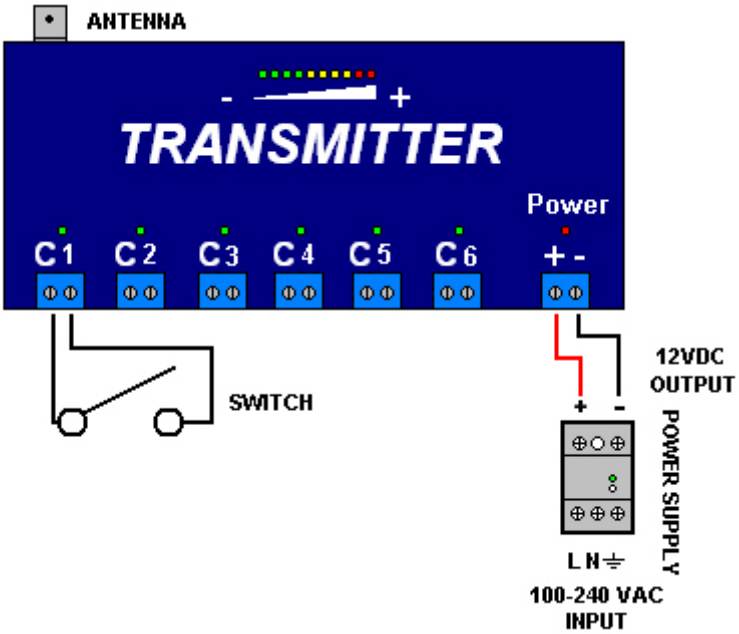

Operation

Operation is simple; connect a switch, relay, or any device with a dry contact closure to the transmitter inputs (terminal block). When a contact is closed, the transmitter will immediately send an “ON” transmission to the receiver, changing the state of the selected receiver output from 0 VDC to 12 VDC @ 1 amp. The receiver output can be used to activate a relay, solenoid or light. Immediately after a contact is open, the transmitter will send an “OFF” transmission to the receiver, changing the state of the selected output from 12 VDC to 0 VDC which turns off the connected device.

Receiver Output

Upon successful reception of the transmission from the transmitter, the receiver will activate the selected output(s). Each output is designed to provide 12 VDC and 1 A of current. Any devices connected to an output must not have a current draw of more than 1 A @ 12 VDC. A general-purpose relay can be used to activate a device such as a contactor with a 110 VAC coil or a device requiring more than 1 A @ 12 VDC.

Once an output is activated, it will remain active for 20 minutes. The output is maintained by the 18-minute repeat transmission of the transmitter. With every transmission from the transmitter, the 20-minute off delay is reset. Immediately upon receiving an “OFF” transmission from the transmitter, the selected output(s) are deactivated. The 20-minute “OFF” delay prevents the receiver output from remaining active in the event that the “OFF” transmission is not received.

DIP Switch Configuration

Each transmitter and receiver has one eight-position DIP switch. The DIP switches for the transmitter and the receiver come pre-configured from RCT. The positions of the DIP switch for the transmitter must match the positions of the DIP switch for its corresponding receiver(s). These switches can be on or off in any combination as long as the switches are configured the same on all the transmitters and the receiver in the system.

Reading the Noise/Signal Strength Analyzer

Integrated in the receiver is a noise/signal strength analyzer. This will display the level of ambient noise and the strength of the incoming transmission from the transmitter. The green LEDs indicate a low to medium level of ambient noise, the amber LEDs indicate a medium to high level of ambient noise, and the red LEDs indicate a high level of ambient noise. Increased signal reception can be obtained by reducing the level of noise. The fewer LEDs illuminated the better reception. Eliminating the sources of ambient noise, shielding your product from them, and/or relocating the antenna can help reduce the noise

level. When receiving a transmission from the transmitter, the noise/signal strength analyzer will display the signal strength of the transmitter. The green LEDs indicate a low to medium level of signal strength, the amber LEDs indicate a medium to high level of signal strength, and the red LEDs indicate a high level of signal strength.

Optimizing Your Wireless Switch System

- Supply the antennas for the receiver and the transmitter with a good ground plane by either attaching a 10 AWG or larger wire from the lightning arrestor to an earth ground or mounting the antenna to a metal pole or conduit connected to an earth ground.

- Mount the antennas at least 40 feet away from electric motors, large power transformers, power lines, VFDs or any equipment that produces ambient electrical noise.

- Mount all antennas outdoors. For equipment located indoors, run a length of RG-58 coaxial cable from the receiver to an antenna mounted outdoors.

- Mount antennas as high as possible, at least 3 feet away from vertical surfaces and not under roof awnings. If mounting the antenna on a building, mount it at the apex or the highest point of the building.

- When mounting the antenna to a metal pole, mount the antenna at the top of the pole or at least 3 feet away from the pole.

- Avoid mounting the antenna on the same pole as the power service.

- Avoid mounting the antenna on or near a chain link fence. If necessary, the antenna can be mounted at least 3 feet above the fence

- Use only high-quality antenna and cable connectors, which are available from Remote Control Technology.
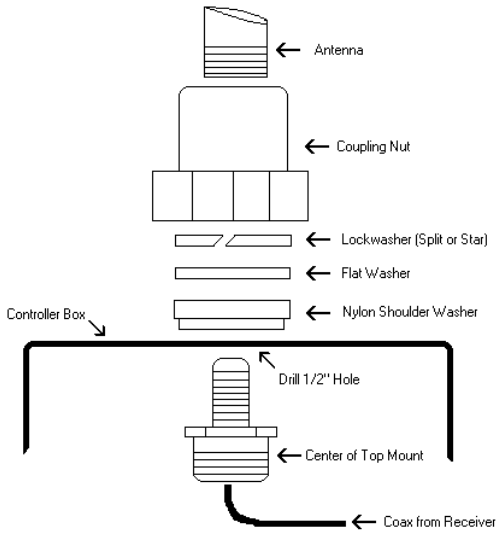
- Make sure that the antenna-mounting bracket is assembled as shown in the figure to the right.