Phone: (866) 701-1146
Fax: (425) 216-7558
www.remotecontroltech.com

Wireless Automation System 1 Installation and Operation Guide

Introduction 1
Before Installation 1
Receiver Installation 2
Transmitter Installation 3
WAS 1 Receiver Operation 4
WAS 1 Transmitter Operation 5
Channel Forwarding 5
Optimizing Your Wireless Switch System 7

Introduction

Thank you for choosing Remote Control Technology's Wireless Automation System 1 (WAS 1). This versatile device has numerous practical applications and will surely become a mainstay in your business and production structure. This guide will help you install your new wireless switch system and show you how to operate and customize it to fit your needs.

This system consists of:

- 1 wireless receiver
- 1 wireless transmitter
- 2 plastic NEMA 4 enclosures with built-in power supplies
- 2 sets of wall mounting brackets for the enclosures
- 2 42" high-gain antennas
- 2 right angle mounting brackets

Before Installation

- Remote Control Technology recommends that you have your new wireless switch system installed by a professional electrician.
- Remember to keep AC and DC wiring in separate bundles.
- Use a multi-conductor shielded cable to connect any devices.
- Provide a good earth ground to the receiver and transmitter power supplies.
- Be sure to bench test the system before installation.

To Test: Separate the transmitter and the receiver by at least 20ft. Do not install the receiver antenna while testing. Never transmit without attaching the transmitter antenna.

Receiver Installation

1. Remove the inside cover of the receiver to reveal the relay and security DIP switch settings. Select the relay mode and receiver security code (see WAS 1 Receiver Operation).

2. Replace the receiver cover, securing it with the four screws.

3. Connect the wiring terminations of the device that is to be controlled to the terminal block. One side is connected to the common terminal (COM) and the other side is connected to either the normally open (NO) or normally closed (NC) contact.

   Note: The receiver output is a SPDT Class C relay rated for 5 A @ 250 VAC.

4. Attach the antenna to the antenna bracket assembly.

5. Attach the antenna assembly to the coaxial cable provided with the system and connect the coaxial cable to the BNC connector at the top of the receiver enclosure.

   Note: Do not loop excess coaxial cable into a coil. This will cause a radio frequency choke and reduce your signal range. Lay excess cable in a straight line or loosely route it back and forth in an "S" configuration.

6. Affix the wall mounting brackets included with the system to the back of the receiver enclosure and mount the enclosure to a wall, pole, or another enclosure.

7. Connect the 110-220 VAC power to the 12 VDC power supply. Alternatively, connect a 12 VDC power source directly to the receiver.

   Caution: Check all wiring connections before applying power. Failure to do so could result in serious damage to the product.

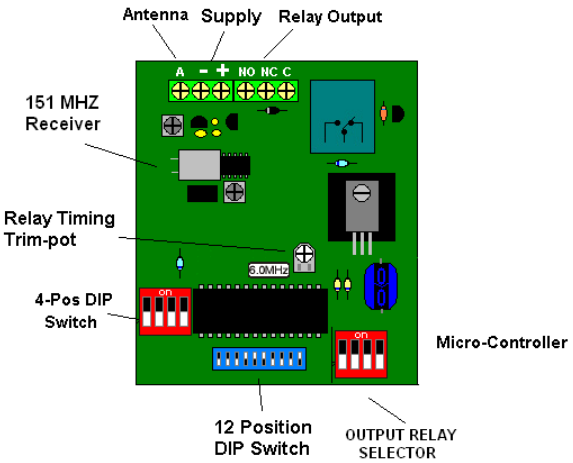

Figure 1. WAS 1 Receiver

Transmitter Installation

1. Remove the inside cover of the receiver to reveal the relay and security DIP switch settings.

2. Match the settings of the 12-position, security DIP switch with the settings on the receiver and select the transmitter operation mode (see WAS 1 Transmitter Operation). Replace the receiver cover, securing it with the four screws.

3. Connect one side of a dry contact closure(s) to the common contact (COM) of the terminal block and connect the other side to one of the input terminals.

4. Attach the antenna to the antenna bracket assembly.

5. Attach the antenna assembly to the coaxial cable provided with the system, and connect the coaxial cable to the BNC connector at the top of the transmitter enclosure.

   Note: Do not loop excess coaxial cable into a coil. This will cause a radio frequency choke and reduce your signal range. Lay excess cable in a straight line or loosely route it back and forth in an "S" configuration.

6. Affix the wall-mounting brackets included with the system to the back of the transmitter enclosure and mount the enclosure to a wall, pole, or another enclosure.

7. Connect the 110–220 VAC power to the 12VDC power supply. Alternatively, connect a 12 VDC power source directly to the receiver.

   Caution: Check all wiring connections before applying power. Failure to do so could result in serious damage to the product.

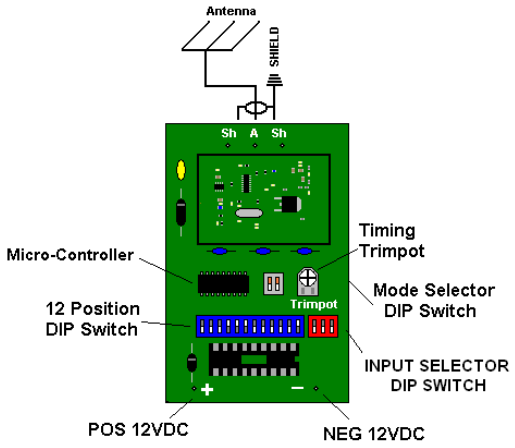

Figure 2. WAS 1 Transmitter

WAS 1 Receiver Operation

The WAS 1 has eight receiver operation modes that can be selected using the four-position DIP switch to the left of the security switch. The DIP switch settings and their corresponding operation modes are listed below in Table 1. For modes that have varying time durations, the durations can be adjusted using the trimpot on the receiver. The white boxes in the diagrams of Table 1 represent the DIP switch position.

Table 1. WAS 1 Receiver Operation Modes

DIP Switch Position	Receiver Operation Mode
	Momentary: In momentary mode, the output will change its state and maintain it for the duration of the transmission received. Once the transmission is terminated, the output will change back to its original state.
	Flip-Flop: In flip-flop mode, the output will change its state and maintain it until a matching transmission is received. Every time a transmission is received, the output will change its state and maintain it until another transmission is received.
	Delayed Off 1: In delayed off 1 mode, the output will change its state and maintain it for 1-10 seconds. This is adjustable using the timing trimpot.
	Delayed Off 2: In delayed off 2 mode, the output will change its state and maintain it for 10-300 seconds. This is adjustable using the timing trimpot.
	Pulsing: In pulsing mode, the output will change its state repeatedly for 10-300 seconds. This duration can be adjusted using the timing trimpot.
	Latching: In latching mode, the output will change its state and maintain it until power to the receiver is removed or interrupted.
	On-Off: On-Off mode requires a two push-button transmitter. Push Button "1" changes the state of the output. Push Button "2" returns the output to it's original state.
	Test: In test mode, the output will change its state and maintain it until position 4 on the DIP switch is in the off position.

WAS 1 Transmitter Operation

The WAS 1 has multiple transmitter operation modes. The operation mode controls the way the transmitter will transmit when an input is closed. The time durations of each operation mode are controlled using the trimpot on the transmitter. Turning the trimpot clockwise increases durations and turning it counterclockwise decreases durations. All mode changes are made using the two-position DIP switch. The white boxes in the diagrams of Table 2 below represent the DIP switch position.

Table 2. WAS 1 Transmitter Operation Modes

DIP Switch Position	Transmitter Operation Mode
	2 to 62 second Repeat Transmission Transmitter will transmit a 1.5 second transmission burst and then repeat the burst transmission every 2-62 seconds if at least one code switch from the eight-position DIP switch is ON and power is connected.
	1 to 10 Minute Repeat Transmission Same as mode 1, except the repeat burst transmission is 1-10 minutes.
	Continuous Five-Minute Transmission Transmitter will transmit continuously for five minutes. The maximum transmit time of the transmitter is five minutes.
	One Burst Transmission Transmitter will transmit for a duration between 1.5 seconds to 10 seconds and then go into sleep mode.

Channel Forwarding

The WAS 1 is capable of communicating with other WAS transmitters and receivers that have different numbers of outputs. For example, a WAS 1 transmitter can be used to control an output of a WAS 8 receiver, or a WAS 2 transmitter can control the output of a WAS 1 receiver. The process of coordinating the receivers and transmitters of systems with different numbers of inputs and outputs is called “channel forwarding.”

To forward channels with a WAS 1:

1. Match the blue 12-position DIP switch positions (which controls the security codes) on all the WAS transmitters and receivers being used. This allows all the WAS transmitters and receivers to communicate together.

2a. **Multiple Transmitters to One Receiver**
On the transmitters, use the 3-position DIP switches to the right of the 12-position DIP switches to select which receiver output the transmitters will control.

2b. **One Transmitter to Multiple Receivers**
For a receiver, use the 3-position DIP switch to the right of the 12-position DIP switch to select which transmitter input the receiver will respond to.

The DIP switch settings used to select inputs or outputs are shown below in Table 3. The white boxes in the diagrams of Table 3 represent the DIP switch position.

Table 3. WAS Channel Forwarding Settings

Transmitter Settings		Receiver Settings	
DIP Switch Position	**Selected Output**	**DIP Switch Position**	**Selected Input**
	Output 1		Input 1
	Output 2		Input 2
	Output 3		Input 3
	Output 4		Input 4
	Output 5		Input 5
	Output 6		Input 6
	Output 7		Input 7
	Output 8		Input 8

Optimizing Your Wireless Switch System

- Supply the antennas for the receiver and the transmitter with a good ground plane by either attaching a 10 AWG or larger wire from the lightning arrestor to an earth ground or by mounting the antenna to a metal pole or conduit connected to an earth ground.

- Mount the antennas at least 40 feet away from electric motors, large power transformers, power lines, VFDs, or any equipment that produces ambient electrical noise.

- Mount all antennas outdoors. For equipment located indoors, run a length of RG-58 coaxial cable from the receiver to an antenna mounted outdoors.

- Mount antennas as high as possible, at least 3 feet away from vertical surfaces and not under roof awnings. If mounting the antenna on a building, mount it at the apex or the highest point of the building.

- When mounting the antenna to a metal pole, mount the antenna at the top of the pole or at least 3 feet away from the pole.

- Avoid mounting the antenna on the same pole as the power service.

- Avoid mounting the antenna on or near a chain link fence. If necessary, the antenna can be mounted at least 3 feet above the fence

- Use only high-quality antenna and cable connectors, which are available from Remote Control Technology.